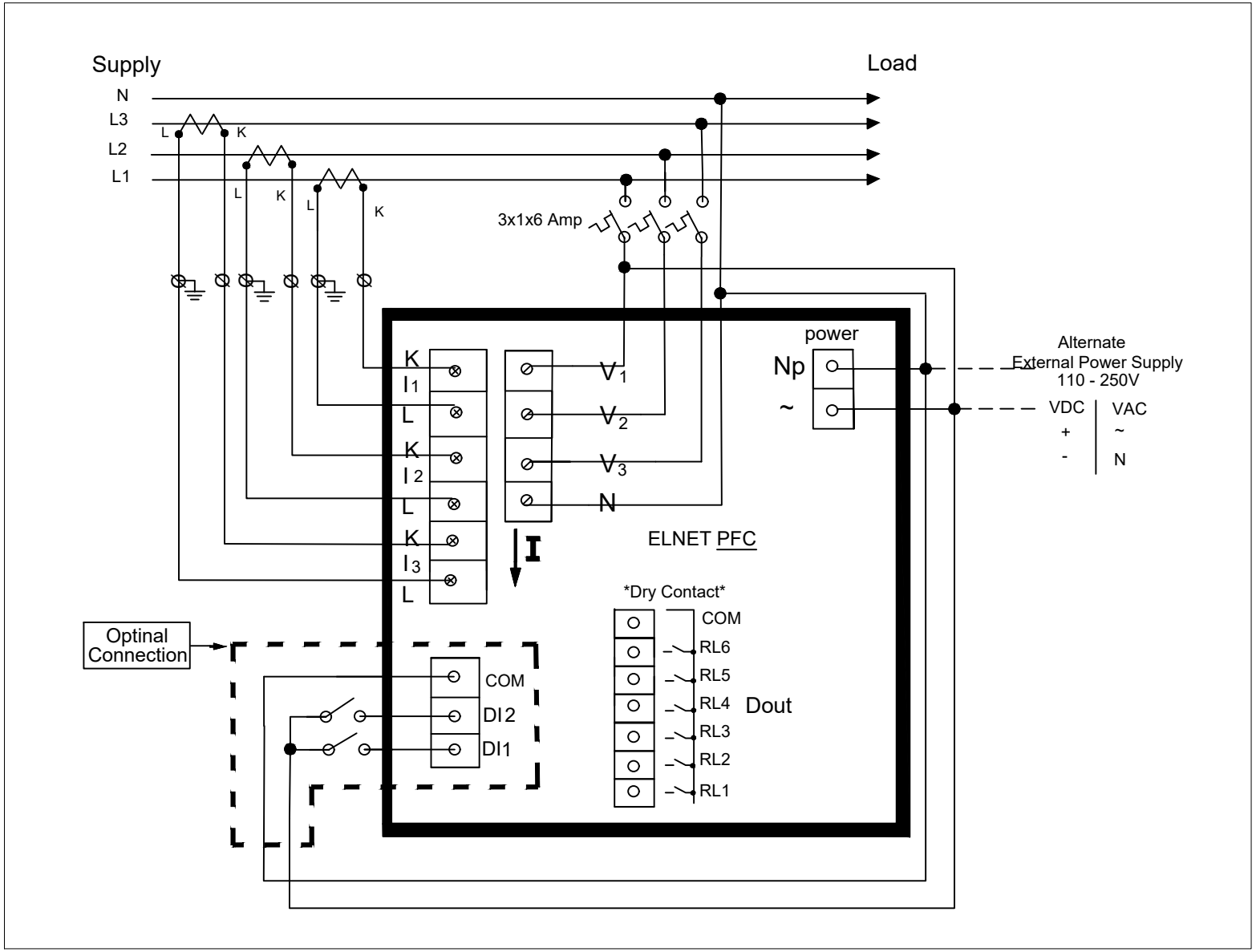
Supply
Load
N
L3
L2
L1
L
K
3x1x6 Amp
K
I1
L
K
I2
L
K
I3
L
V1
V2
V3
N
I
power
Np
~
Alternate
External Power Supply
110 - 250V
VDC
VAC
+
~
-
N
ELNET PFC
Dry Contact
COM
RL6
RL5
RL4
RL3
RL2
RL1
Dout
Optinal
Connection
COM
DI2
DI1