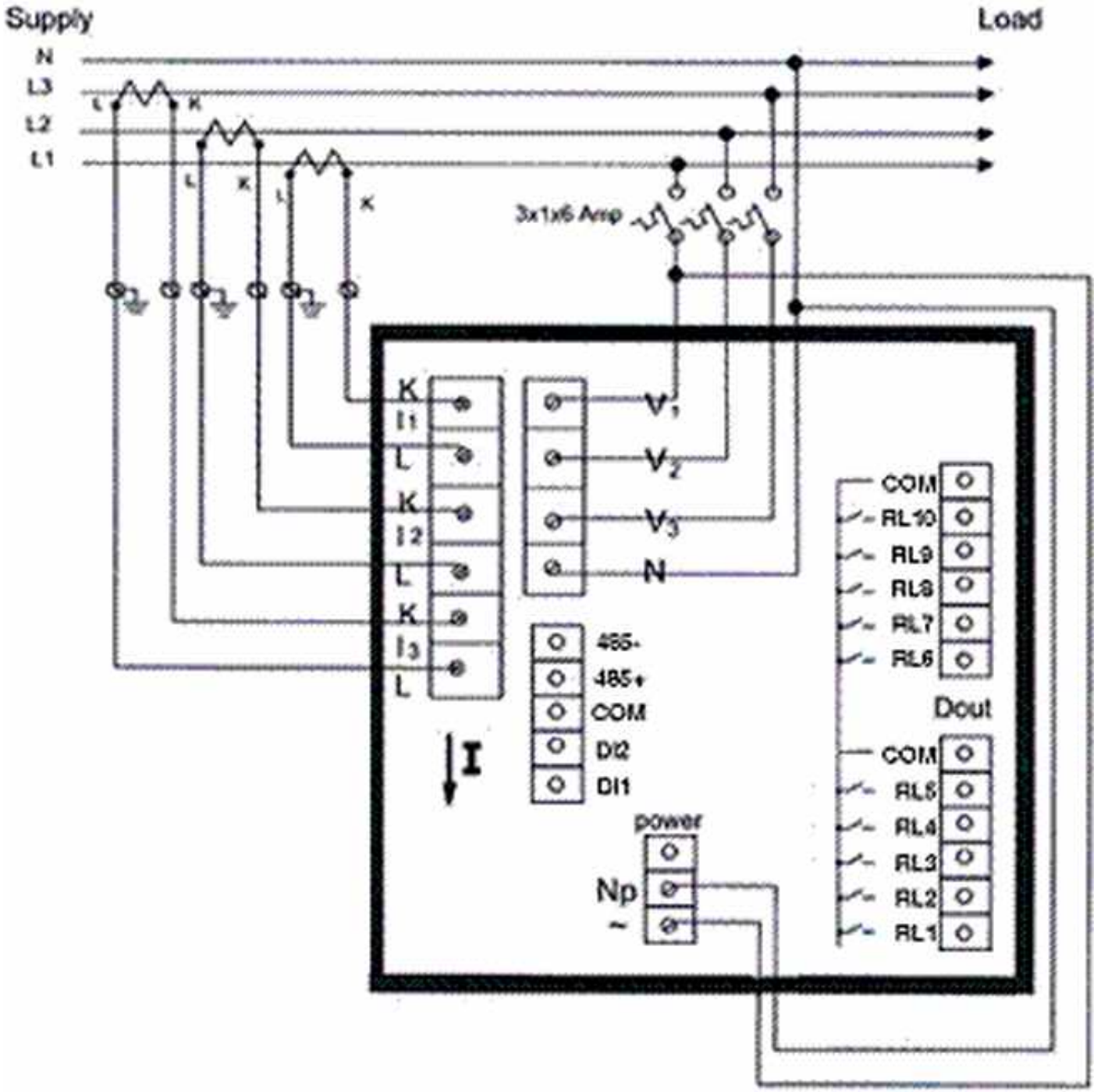
Supply
Load
N
L3
L2
L1
3x1x6 Amp
K
L
I1
I2
I3
V1
V2
V3
N
485-
485+
COM
DI2
DI1
power
Np
~
I
COM
RL10
RL9
RL8
RL7
RL6
Dout
COM
RL5
RL4
RL3
RL2
RL1